INSTRUCTION & SERVICE MANUAL
MA1 & MA2 M Range Sounders

- IP67/66 & Type 4/4X/13
- -40°C to +66°C (-40°F to +151°F)
- DC: 2.5Kg (5.5lb); AC: 3.0Kg (6.5lb)
- CE, UKCA, EAC & Russian Maritime Register approved

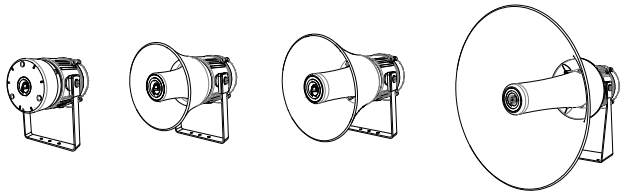

Unit Type Code	Nominal Voltage	Voltage Range	Nominal Current P1 (mA)	Nominal Current P2 (mA)	Nominal Current P3 (mA)	Sound Pressure Level P1, dB(A)			Sound Pressure Level P2, dB(A)			Sound Pressure Level P3, dB(A)		
						Max*	Nom†	$\bar{x}$‡	Max*	Nom†	$\bar{x}$‡	Max*	Nom†	$\bar{x}$‡
MA1RDC024	12 Vdc / 24 Vdc / 48Vdc	10-60Vdc	280/ 224/122			113.6	110.7	109.7						
MA1FDC024						116.6	113.7	112.7						
MA2FDC024				376/391/ 223§	440/888/ 453				120.0	116.6	114.7	123.4	120.1	118.0
MA2HDC024				376/391/ 223	440/888/ 453§				125.3	122.5	120.1	128.6	125.9	123.1
MA1RAC230	115 Vac / 230 Vac 50/60Hz	100 - 240Vac 50/60Hz	100/64			113.6	110.7	109.7						
MA1FAC230						116.6	113.7	112.7						
MA2FAC230				173/107§	340/212				120.0	116.6	114.7	123.4	120.1	118.0
MA2HAC230				173/107	340/212§				125.3	122.5	120.1	128.6	125.9	123.1

*Max = Tone 4 / †Nom. = Tone 44 / ‡$\bar{x}$ = Average over 64 tones / § Denotes factory P2/P3 setting

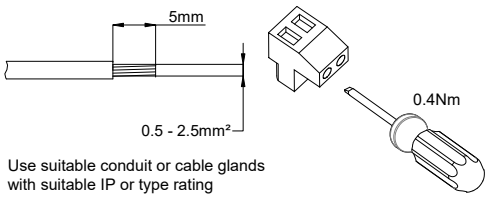

Use suitable conduit or cable glands with suitable IP or type rating

Attention: Installation must be carried out by an electrician in compliance with the latest codes and regulations.
Attention: L'installation doit être effectuée par un électricien conformément aux derniers codes et réglementations.
Achtung: Die Installation muss von einem Elektriker gemäß den neuesten Vorschriften und Bestimmungen durchgeführt werden.
Attenzione: L'installazione deve essere eseguita da un elettricista in conformità con i codici e le normative più recenti.
Atención: La instalación debe ser realizada por un electricista de acuerdo con los últimos códigos y regulaciones.
Atenção: A instalação deve ser realizada por um eletricista de acordo com os códigos e regulamentos mais recentes.
Внимание: установка должна выполняться электриком в соответствии с последними нормами и правилами.

Attention: Disconnect from power source before installation or service to prevent electric shock
Attention: Débranchez-le de la source d'alimentation avant l'installation ou l'entretien pour éviter tout choc électrique.
Achtung: Vor Installation oder Wartung von der Stromquelle trennen, um einen Stromschlag zu vermeiden.
Attenzione: scollegare dall'alimentazione prima dell'installazione o dell'assistenza per evitare scosse elettriche.
Atención: desconéctelo de la fuente de alimentación antes de la instalación o el servicio para evitar descargas eléctricas.
Atenção: Desconecte da fonte de alimentação antes da instalação ou serviço para evitar choque elétrico
Внимание: отключите от источника питания перед установкой или обслуживанием, чтобы предотвратить поражение электрическим током.

AC

See D207-06-005

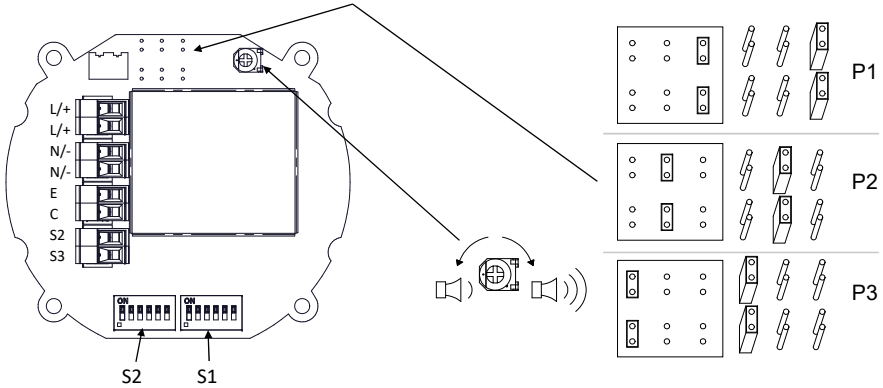

DC

See D207-06-001

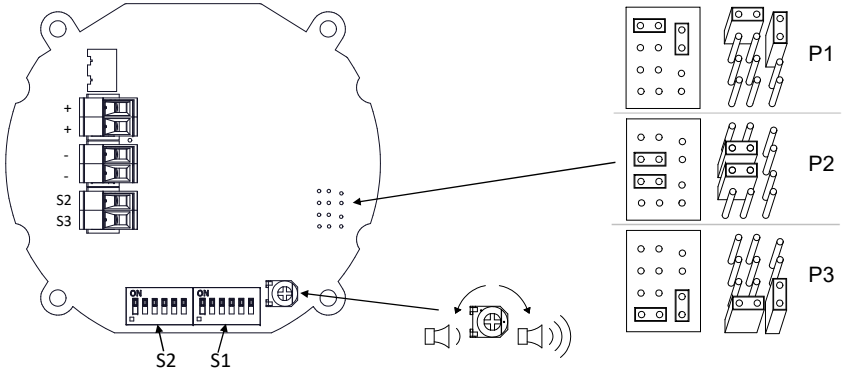

(DC Only, see D207-06-001)

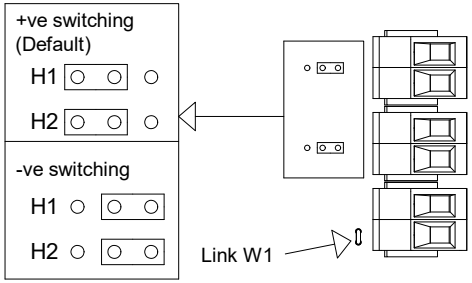

(AC & DC, see D221-95-001)

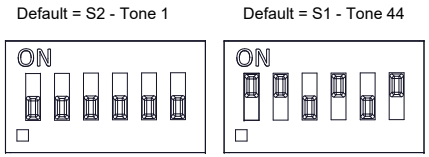

(ON = 1, OFF = 0)

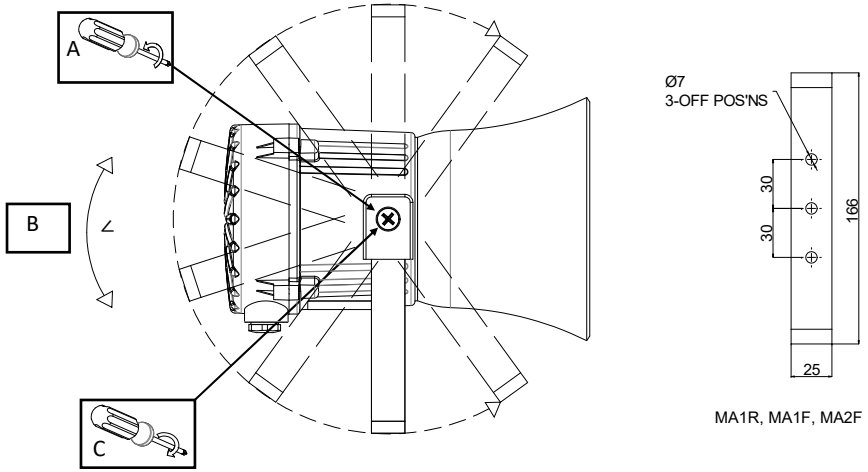

MA1R, MA1F, MA2F

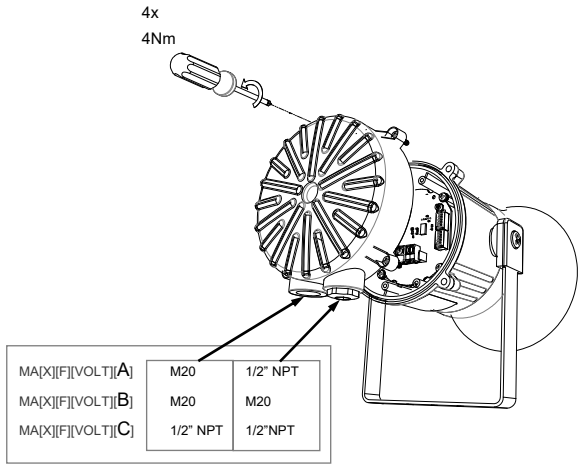

MA[X][F][VOLT][A]	M20	1/2" NPT
MA[X][F][VOLT][B]	M20	M20
MA[X][F][VOLT][C]	1/2" NPT	1/2"NPT

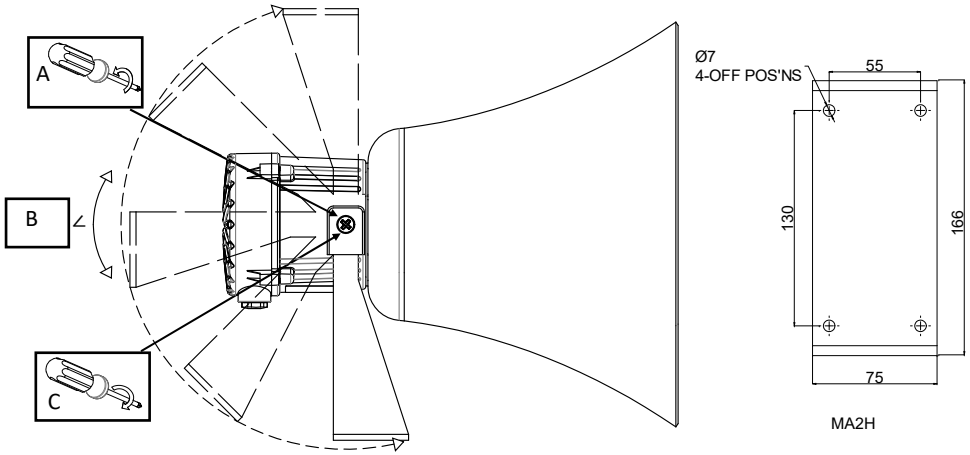

MA2H

FIRE INSTRUCTION & SERVICE MANUAL
MA Sounder UL464 / CAN/ULC-S525 Fire
Models: MA1RDC024-A, MA1FDC024-A, MA2FDC024-A, MA2HDC024-A, MA1RDC024-S, MA1FDC024-S, MA2FDC024-S, MA2HDC024-S

Attention: Installation must be carried out by an electrician in compliance with the National Electrical Code, NFPA 70, and the National Fire Alarm Signaling Code, NFPA 72 or CSA 22.1 Canadian Electrical Code, Part I, Safety Standard for Electrical Installations, Section 32. / L'installation doit exclusivement être réalisée par du personnel qualifié, conformément au code national d'électricité américain, NFPA 70, et le code national d'alarrme incendie et de signalisation NFPA 72 ou CSA 22.1 Code canadien de l'électricité, première partie, norme de sécurité relative aux installations électriques, Section 32

Attention: Disconnect from power source before installation or service to prevent electric shock / Débranchez-le de la source d'alimentation avant l'installation ou l'entretien pour éviter tout choc électrique.

Attention: Do not Paint / Ne pas Peinturer

- -40°C to +66°C / -40°F to +151°F
- Units can be mounted using at least 2 of the 3-off ø7mm holes in the mounting bracket.
- MA1RDC024-A is approved for use as an audible signal appliance for fire alarm use – Public Mode (UL464 & CAN/ULC-S525) and produce a minimum sound pressure level of:
  84.21dB(A) at 10 feet, (figures @ worst case 11.5Vdc).
- MA1RDC024-S is approved for use as an audible signal appliance for fire alarm use – Public Mode (UL464 & CAN/ULC-S525) and produce a minimum sound pressure level of:
  88.06dB(A) at 10 feet, (figures @ worst case 20Vdc).
- MA1FDC024-A is approved for use as an audible signal appliance for fire alarm use – Public Mode (UL464 & CAN/ULC-S525) and produce a minimum sound pressure level of:
  93.63dB(A) at 10 feet, (figures @ worst case 11.5Vdc).
- MA1FDC024-S is approved for use as an audible signal appliance for fire alarm use – Public Mode (UL464 & CAN/ULC-S525) and produce a minimum sound pressure level of:
  96.63dB(A) at 10 feet, (figures @ worst case 28Vdc).
- MA2FDC024-A is approved for use as an audible signal appliance for fire alarm use – Public Mode (UL464 & CAN/ULC-S525) and produce a minimum sound pressure level of:
  P2: 94.53dB(A) / P3: 95.16dB(A) at 10 feet, (figures @ worst case 11.5Vdc).
- MA2FDC024-S is approved for use as an audible signal appliance for fire alarm use – Public Mode (UL464 & CAN/ULC-S525) and produce a minimum sound pressure level of:
  P2: 100.12dB(A)* / P3: 100.99dB(A) at 10 feet, (figures @ worst case 20Vdc, *28Vdc)
- MA2HDC024-A is approved for use as an audible signal appliance for fire alarm use – Public Mode (UL464 & CAN/ULC-S525) and produce a minimum sound pressure level of:
  P2: 93.66B(A) / P3: 94.24dB(A) at 10 feet, (figures @ worst case 11.5Vdc).
- MA2HDC024-S is approved for use as an audible signal appliance for fire alarm use – Public Mode (UL464 & CAN/ULC-S525) and produce a minimum sound pressure level of:
  P2: 98.37dB(A)* / P3: 100dB(A) at 10 feet, (figures @ worst case 20Vdc, *28Vdc).

- For Fire Alarm applications, the Sounder Volume must be at the highest setting, (see volume control section). For fire alarm use, Tone 12 as shown below must be selected:

Stage 1 Set DIP SW 1 Tone No.	Tone Description	Tone Visual	Stage 1 & 2 DIP SW 1/2 Settings 1 2 3 4 5 6	Stage 3 Set DIP SW 1 (S3)	Stage 4 Set DIP SW 1 (S2 + S3)
12	1000Hz(0.5s on, 0.5s off)x3 + 1s gap ISO 8201 Temporal Pattern	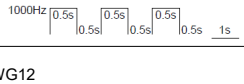	1 1 0 1 0 0	1	8

- Connection Terminals: Pluggable, 0.2 - 2.5mm^2 / AWG24 - AWG12
- Terminal Tightening torque 0.4Nm
- To maintain Ingress Protection, cable entries must be fitted with suitably rated cable glands or stopping plugs
- Units can be located indoor dry use, wall or ceiling mounted and there are no limitations on orientation
- Factory finishes are not intended to be modified

Surge Current Ratings for use in fire alarm systems

Model	Nominal Voltage	Voltage Range	Initial Peak	Initial RMS
MA1RDC024-A / MA1FDC024-A	24V dc	11.5 - 54V dc	P1: 1312mA	P1: 159mA
MA1RDC024-S / MA1FDC024-S		20 - 28V dc	P1: 1312mA	P1: 159mA
MA2FDC024-A / MA2HDC024-A		11.5 - 54V dc	P2: 1005mA / P3: 1267mA	P2: 286mA / P3: 553mA
MA2FDC024-S / MA2HDC024-S		20 - 28V dc	P2: 1005mA / P3: 1267mA	P2: 286mA / P3: 553mA

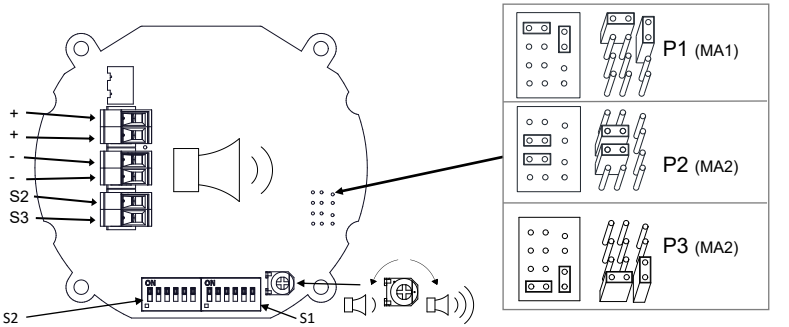

MA1FDC024-A & MA1FDC024-S Sounder Directional Characteristics for Canadian Fire CAN/ULC-S525		
OSPL	Horizontal Axis	Vertical Axis
-3dB(A)	+/- 30°	+/- 30°
-6dB(A)	+/- 35°	+/- 35°
+/- 90°	-2.9	-2.7

MA1RDC024-A & MA1RDC024-S Sounder Directional Characteristics for Canadian Fire CAN/ULC-S525		
OSPL	Horizontal Axis	Vertical Axis
-3dB(A)	+/- 45°	+/- 40°
-6dB(A)	+/- 50°	+/- 45°
+/- 90°	-4.1	-4.8

MA2FDC024-A & MA2FDC024-S Sounder Directional Characteristics for Canadian Fire CAN/ULC-S525 (P3)		
OSPL	Horizontal Axis	Vertical Axis
-3dB(A)	+/- 35°	+/- 30°
-6dB(A)	+/- 45°	+/- 35°
+/- 90°	-3.6	-3.7

MA2HDC024-A & MA2HDC024-S Sounder Directional Characteristics for Canadian Fire CAN/ULC-S525 (P3)		
OSPL	Horizontal Axis	Vertical Axis
-3dB(A)	+/- 25°	+/- 20°
-6dB(A)	+/- 30°	+/- 25°
+/- 90°	-18.1	-20.5

Stage 1 Set DIP SW 1 Tone No.	Tone Description	Tone Visual	Stage 1 & 2 DIP SW 1/2 Settings 1 2 3 4 5 6	Stage 3 Set DIP SW 1 (S3)	Stage 4 Set DIP SW 1 (S2 + S3)
1	1000Hz PFEER Toxic Gas	1000Hz	0 0 0 0 0 0	2	44
2	1200/500Hz @ 1Hz DIN /PFEER P.T.A.P.	1200Hz 500Hz 1s	1 0 0 0 0 0	3	44
3	1000Hz @ 0.5Hz(1s on, 1soff) PFEER Gen. Alarm	1000Hz 1s 1s	0 1 0 0 0 0	2	44
4	1.4KHz-1.6KHz 1s, 1.6KHz-1.4KHz 0.5s NF C 48-265	1600Hz 1400Hz 1s 0.5s	1 1 0 0 0 0	24	1
5	544Hz(100mS)/440Hz (400mS) NF S 32-001	544Hz 440Hz 0.1s 0.4s	0 0 1 0 0 0	19	1
6	1500/500Hz - (0.5s on , 0.5s off) x3 + 1s gap AS4428	1500Hz 500Hz 0.5s 0.5s 0.5s 0.5s 0.5s 1s	1 0 1 0 0 0	44	1
7	500-1500Hz Sweeping 2 sec on 1 sec off AS4428	1500Hz 500Hz 2s 1s	0 1 1 0 0 0	44	1
8	500/1200Hz @ 0.26Hz (3.3son, 0.5s off) Netherlands - NEN 2575	1200Hz 500Hz 3s 0.5s	1 1 1 0 0 0	24	35
9	1000Hz (1s on, 1s off)x7 + (7s on, 1s off) IMO Code 1a	1000Hz 1s 1s 1s 1s 1s 1s 1s 1s 1s 1s 1s 1s 1s 7s 7s	0 0 0 1 0 0	34	1
10	1000Hz (1s on, 1s off)x7 + (7s on, 1s off) IMO Code 1a		1 0 0 1 0 0	34	1
11	420Hz(0.5s on, 0.5s off)x3 + 1s gap ISO 8201 Temporal Pattern	420Hz 0.5s 0.5s 0.5s 0.5s 0.5s 0.5s 1s	0 1 0 1 0 0	1	8
12	1000Hz(0.5s on, 0.5s off)x3 + 1s gap ISO 8201 Temporal Pattern	1000Hz 0.5s 0.5s 0.5s 0.5s 0.5s 0.5s 1s	1 1 0 1 0 0	1	8
13	422/775Hz - (0.85 on, 0.5 off) x3 + 1s gap NFPA - Temporal Coded	775Hz 422Hz 0.85 0.5s 0.85 0.5s 0.85 0.5s 1s	0 0 1 1 0 0	1	8
14	1000/2000Hz @ 1Hz Singapore	2000Hz 1000Hz 0.5s 0.5s	1 0 1 1 0 0	3	35
15	300Hz Continuous (f=300)	f(Hz)	0 1 1 1 0 0	24	35
16	440Hz Continuous (f=440)		1 1 1 1 0 0	24	35
17	470Hz Continuous (f=470)		0 0 0 0 1 0	24	35
18	500Hz Continuous IMO code 2 (Low) (f=500)		1 0 0 0 1 0	24	35
19	554Hz Continuous (f=554)		0 1 0 0 1 0	24	35
20	660Hz Continuous (f=660)		1 1 0 0 1 0	24	35
21	800Hz IMO code 2 (High) (f=800)		0 0 1 0 1 0	24	35
22	1200Hz Continuous (f=1200)		1 0 1 0 1 0	24	35
23	2000Hz Continuous (f=2000)		0 1 1 0 1 0	3	35
24	2400Hz Continuous (f=2400)		1 1 1 0 1 0	20	35
25	440Hz @0.83Hz (50 cycles/minute) Intermittent (f=440, a=0.6, b=0.6)	f(Hz) a(s) b(s)	0 0 0 1 1 0	44	8
26	470Hz @0.9Hz - 1.1s Intermittent (f=470, a=0.55, b=0.55)		1 0 0 1 1 0	44	8
27	470Hz @5Hz - (5 cycles/second) Intermittent (f=470, a=0.1, b=0.1)		0 1 0 1 1 0	44	8
28	544Hz @ 1.14Hz - 0.875s Intermittent (f=470, a=0.43, b=0.44)		1 1 0 1 1 0	24	8
29	655Hz @ 0.875Hz Intermittent (f=655, a=0.57, b=0.57)		0 0 1 1 1 0	44	8
30	660Hz @0.28Hz - 1.8sec on, 1.8sec off Intermittent (f=660, a=1.8, b=1.8)		1 0 1 1 1 0	24	8
31	660Hz @3.34Hz - 150mS on, 150mS off Intermittent (f=660, a=0.15, b=0.15)		0 1 1 1 1 0	24	8
32	745Hz @ 1Hz Intermittent (f=745, a=0.5, b=0.5)		1 1 1 1 1 0	24	8
33	800Hz - 0.25sec on, 1 sec off Intermittent (f=800, a=0.25, b=1)		0 0 0 0 0 1	24	8
34	800Hz @ 2Hz IMO code 3.a (High) Intermittent (f=800, a=0.25, b=0.25)		1 0 0 0 0 1	24	8
35	1000Hz @ 1Hz Intermittent (f=1000, a=0.5, b=0.5)		0 1 0 0 0 1	24	8
36	2400Hz @ 1Hz Intermittent (f=2400, a=0.5, b=0.5)		1 1 0 0 0 1	24	8
37	2900Hz @ 5Hz Intermittent (f=2900, a=0.1, b=0.1)		0 0 1 0 0 1	24	8
38	363/518Hz @ 1Hz Alternating (f=363, f1=518, a=0.1)	f1(Hz) f(Hz) a(s) a(s)	1 0 1 0 0 1	8	19
39	450/500Hz @ 2Hz Alternating (f=450, f1=500, a=0.25)		0 1 1 0 0 1	8	19
40	554/440Hz @ 1Hz Alternating (f=440, f1=554, a=0.5)		1 1 1 0 0 1	24	19
41	554/440Hz @ 0.625Hz Alternating (f=440, f1=554, a=0.8)		0 0 0 1 0 1	8	19
42	561/760Hz @0.83Hz (50 cycles/minute) Alternating (f=561, f1=760, a=0.6)		1 0 0 1 0 1	8	19
43	780/600Hz @ 0.96Hz Alternating (f=600, f1=780, a=0.52)	f1(Hz) f(Hz) a(s) a(s)	0 1 0 1 0 1	8	19
44	800/1000Hz @ 2Hz Alternating (f=800, f1=1000, a=0.25)	f1(Hz) f(Hz) a(s) a(s)	1 1 0 1 0 1	24	19
45	970/800Hz @ 2Hz Alternating (f=800, f1=970, a=0.25)	f1(Hz) f(Hz) a(s) a(s)	0 0 1 1 0 1	8	19
46	800/1000Hz @ 0.875Hz Alternating (f=800, f1=1000, a=0.57)	f1(Hz) f(Hz) a(s) a(s)	1 0 1 1 0 1	24	19
47	2400/2900Hz @ 2Hz Alternating (f=2400, f1=2900, a=0.25)		0 1 1 1 0 1	24	19
48	500/1200Hz @ 0.3Hz Sweeping (f=500, f1=1200, a=3.34)	f1(Hz) f(Hz) a(s)	1 1 1 1 0 1	24	12
49	560/1055Hz @ 0.18Hz Sweeping (f=560, f1=1055, a=5.47)		0 0 0 0 1 1	24	12
50	560/1055Hz @ 3.3Hz Sweeping (f=560, f1=1055, a=0.3)		1 0 0 0 1 1	24	12
51	600/1250Hz @ 0.125Hz Sweeping (f=600, f1=1250, a=8)	f1(Hz) f(Hz) a(s)	0 1 0 0 1 1	24	12
52	660/1200Hz @ 1Hz Sweeping (f=660, f1=1200, a=1)	f1(Hz) f(Hz) a(s)	1 1 0 0 1 1	24	12
53	800/1000Hz @ 1Hz Sweeping (f=800, f1=1000, a=1)		0 0 1 0 1 1	24	12
54	800/1000Hz @ 7Hz Sweeping (f=800, f1=1000, a=0.14)		1 0 1 0 1 1	24	12
55	800/1000Hz @ 50Hz Sweeping (f=800, f1=1000, a=0.02)		0 1 1 0 1 1	24	12
56	2400/2900Hz @ 7Hz Sweeping (f=2400, f1=2900, a=0.14)		1 1 1 0 1 1	24	12
57	2400/2900Hz @ 1Hz Sweeping (f=2400, f1=2900, a=1)		0 0 0 1 1 1	24	12
58	2400/2900Hz @ 50Hz Sweeping (f=2400, f1=2900, a=0.02)		1 0 0 1 1 1	24	12
59	2500/3000Hz @ 2Hz Sweeping (f=2500, f1=3000, a=0.5)		0 1 0 1 1 1	24	12
60	2500/3000Hz @ 7.7Hz Sweeping (f=2500, f1=3000, a=0.13)		1 1 0 1 1 1	24	12
61	800Hz Motor Siren (f=800, a=1.6)	f(Hz) a(s)	0 0 1 1 1 1	24	12
62	1200Hz Motor Siren (f=1200, a=2)		1 0 1 1 1 1	24	
63	2400Hz Motor Siren (f=2400, a=1.7)		0 1 1 1 1 1	24	12
64	Simulated Bell	1450Hz 0.25s 0.69ms	1 1 1 1 1 1	21	12

ISSUE	MOD No.	REASON - INITIAL - DATE
B		Configuration titles amended RSR - 19/05/2021
C	ACN0129	Product Versions Updated RSR - 29/03/2023
D	ACN0153	OPTIONS Y & V MONITORING DETAILS RSR - 06/06/2024

R1
OPTIONAL LINE MONITORING RESISTOR, CUSTOMER SUPPLIED,
RECOMMENDED MINIMUM VALUES:
14V MAX SYSTEM = 120Ω MIN, 2W MIN OR 1KΩ MIN, 0.5W MIN
28V MAX SYSTEM = 470Ω MIN, 2W MIN OR 2.4KΩ MIN, 0.5W MIN

Single Stage Configuration — Config.: 1a

Line Monitoring
Set to positive switching (default)

Stage 1: Apply Power to Stage 1 +ve & Stage 1 -ve

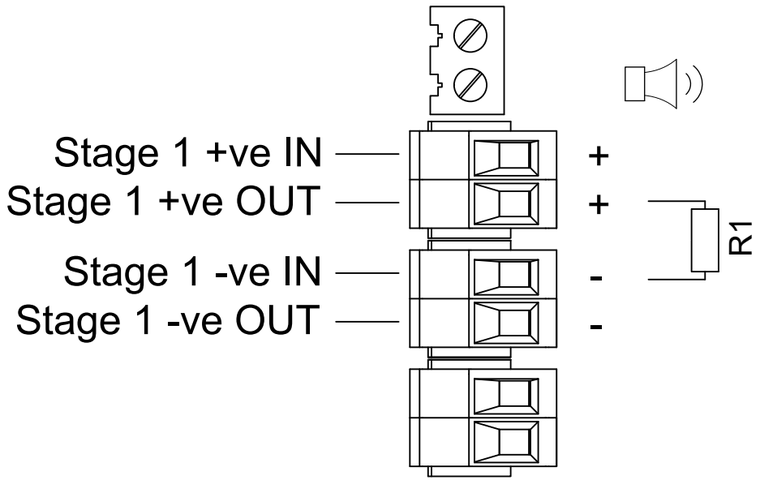

Two Stage Configuration — Config.: 1b

Common Negative
Set to positive switching (default)

Stage 1: Apply Power to Stage 1 +ve & Common -ve
Stage 2: Apply Power to Stage 2 +ve & Common -ve

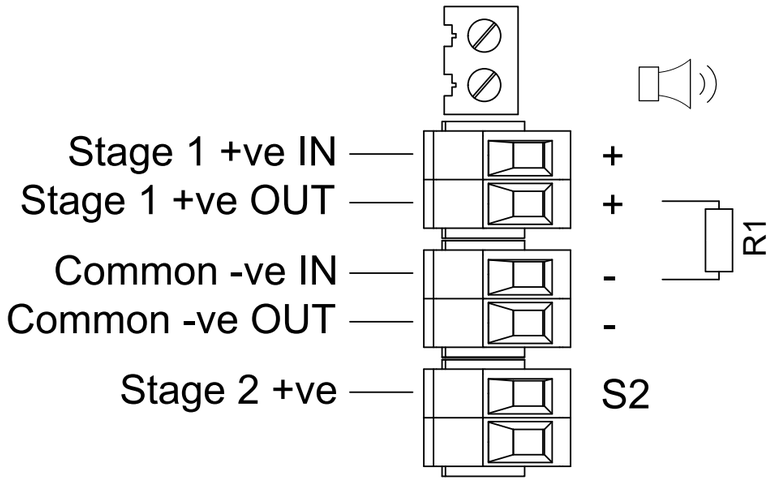

Three/Four Stage Configuration — Config.: 1c

Common Negative
Set to positive switching (default)

Stage 1: Apply Power to Stage 1 +ve & Common -ve
Stage 2: Apply Power to Stage 2 +ve &Common -ve
Stage 3: Apply Power to Stage 3 +ve &Common -ve
Stage 4: Apply Power to Stage 2 +ve, Stage 3 +ve & Common -ve

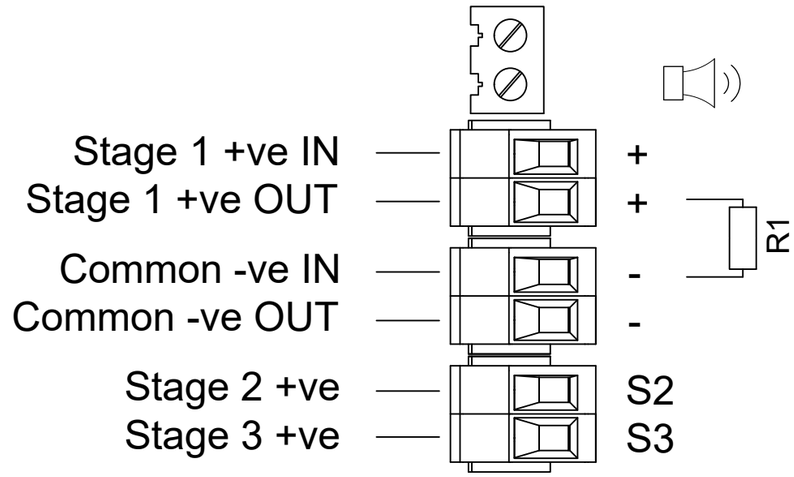

DRAWING TO BS8888:2000
GEOMETRIC TOLERANCES TO ISO1101:1983
LINEAR DIMENSIONAL TOLS
ANGULAR DIMENSIONAL TOLS

STANDARDS
M RANGE

DRAWN	R.S.RAIT	DATE 05/03/2021
CHECKED	B.ISARD	DATE 05/03/2021
APPROVED	R.N.POTTS	DATE 05/03/2021

SURFACE FINISH
WEIGHT (Kg)
MATERIAL
ALTERNATIVE MATERIAL

THIS DRAWING AND ANY INFORMATION OR DESCRIPTIVE MATTER THEREIN IS COMMUNICATED IN CONFIDENCE AND IS THE COPYRIGHT PROPERTY OF EUROPEAN SAFETY SYSTEMS LTD. NEITHER THE WHOLE OR ANY EXTRACT MAY BE DISCLOSED, LOANED, COPIED OR USED FOR MANUFACTURING OR TENDERING PURPOSES WITHOUT THEIR WRITTEN CONSENT.

© EUROPEAN SAFETY SYSTEMS LTD.
AS PER LATEST DATE OF ISSUE SHOWN ABOVE

e2S warning signals
EUROPEAN SAFETY SYSTEMS LTD
IMPRESS HOUSE
MANSELL ROAD
ACTON
LONDON W3 7QH
WWW.E2S.COM

ALL DIMENSIONS IN MM
IF IN DOUBT, ASK - DO NOT SCALE

A3

TITLE MA1R, MA1F, MA2F & MA2H DC SOUNDER WIRING DIAGRAMS

SCALE	SHEET	DRAWING NUMBER
NTS	1 OF 3	D207-06-001

ISSUE	MOD No.	REASON - INITIAL - DATE
B		Configuration titles amended RSR - 19/05/2021
C	ACN0129	Product Versions Updated RSR - 29/03/2023
D	ACN0153	OPTIONS Y & V MONITORING DETAILS RSR - 06/06/2024

OPTIONAL LINE MONITORING RESISTOR, CUSTOMER SUPPLIED, RECOMMENDED MINIMUM VALUES:
14V MAX SYSTEM = 120Ω MIN, 2W MIN OR 1KΩ MIN, 0.5W MIN
28V MAX SYSTEM = 470Ω MIN, 2W MIN OR 2.4KΩ MIN, 0.5W MIN

SWITCHES FOR STAGE OPERATION
CUSTOMER SUPPLIED

Three/Four Stages. Voltage Free 2nd, 3rd & 4th Stage Activation Configuration — Config.: 2

Common Positive
Customer Set H1 & H2 to Negative Switching (See Below)

Stage 1: Apply Power to Common +ve & Stage 1 -ve
Stage 2: Apply Power to Common +ve & Stage 1 -ve & connect Stage 2 -ve to Stage 1 -ve
Stage 3: Apply Power to Common +ve & Stage 1 -ve & connect Stage 3 -ve to Stage 1 -ve
Stage 4: Apply Power to Common +ve & Stage 1 -ve
& connect Stage 2 -ve & Stage 3 -ve to Stage 1 -ve

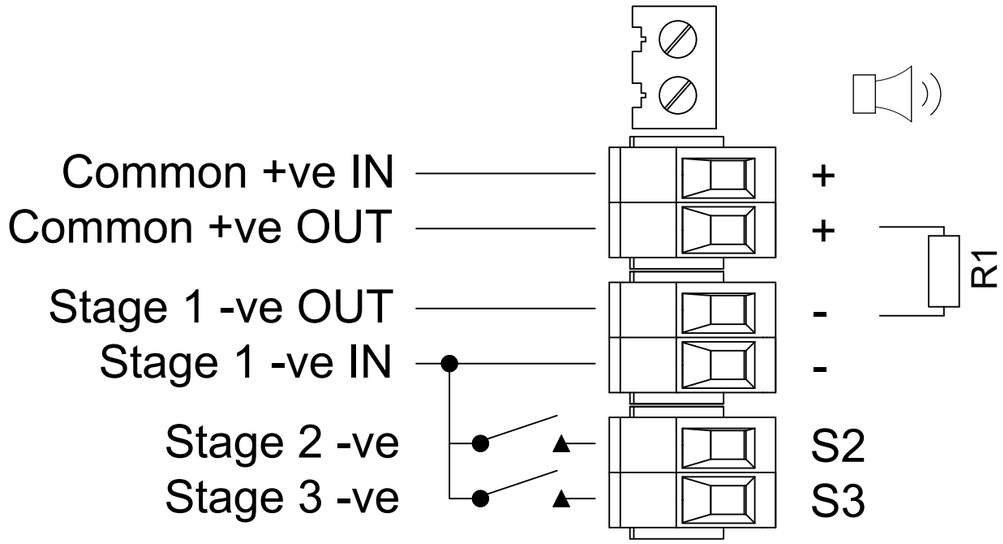

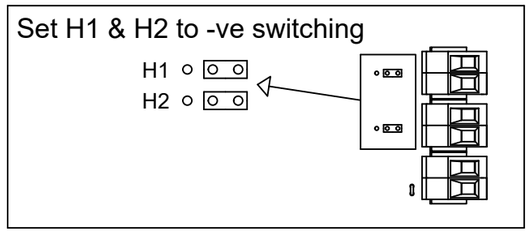

Two Stage Configuration — Config.: 3

Independent Stage Input
Reverse Polarity Stage Monitoring

Stage 1: Apply Power to Stage 1 +ve & Stage 1 -ve
Stage 2: Apply Power to Stage 1 +ve & Stage 1 -ve & connect Stage 2 -ve to Stage 1 -ve

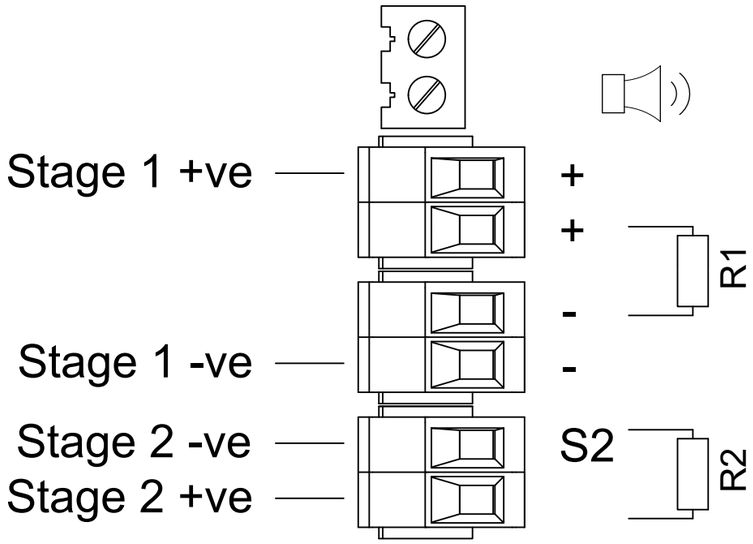

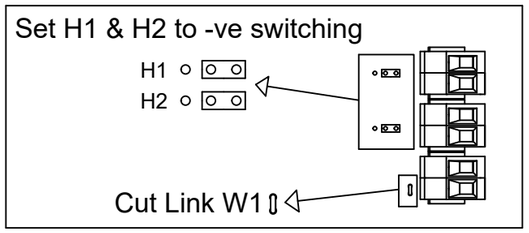

DRAWING TO BS8888:2000
GEOMETRIC TOLERANCES TO ISO1101:1983
LINEAR DIMENSIONAL TOLS
ANGULAR DIMENSIONAL TOLS

STANDARDS
M RANGE

DRAWN	R.S.RAIT	DATE 05/03/2021
CHECKED	B.ISARD	DATE 05/03/2021
APPROVED	R.N.POTTS	DATE 05/03/2021

SURFACE FINISH | WEIGHT (Kg)
MATERIAL
ALTERNATIVE MATERIAL

THIS DRAWING AND ANY INFORMATION OR DESCRIPTIVE MATTER THEREIN IS COMMUNICATED IN CONFIDENCE AND IS THE COPYRIGHT PROPERTY OF EUROPEAN SAFETY SYSTEMS LTD. NEITHER THE WHOLE OR ANY EXTRACT MAY BE DISCLOSED, LOANED, COPIED OR USED FOR MANUFACTURING OR TENDERING PURPOSES WITHOUT THEIR WRITTEN CONSENT.

© EUROPEAN SAFETY SYSTEMS LTD.
AS PER LATEST DATE OF ISSUE SHOWN ABOVE

e2S warning signals
EUROPEAN SAFETY SYSTEMS LTD
IMPRESS HOUSE
MANSELL ROAD
ACTON
LONDON W3 7QH
WWW.E2S.COM

ALL DIMENSIONS IN MM
IF IN DOUBT, ASK - DO NOT SCALE

A3

TITLE MA1R, MA1F, MA2F & MA2H DC SOUNDER WIRING DIAGRAMS

SCALE	SHEET	DRAWING NUMBER
NTS	2 OF 3	D207-06-001

ISSUE	MOD No.	REASON - INITIAL - DATE
B		Configuration titles amended RSR - 19/05/2021
C	ACN0129	Product Versions Updated RSR - 29/03/2023
D	ACN0153	OPTIONS Y & V MONITORING DETAILS RSR - 06/06/2024

R1 OPTIONAL LINE MONITORING RESISTOR, CUSTOMER SUPPLIED, RECOMMENDED MINIMUM VALUES:
14V MAX SYSTEM = 120Ω MIN, 2W MIN OR 1KΩ MIN, 0.5W MIN
28V MAX SYSTEM = 470Ω MIN, 2W MIN OR 2.4KΩ MIN, 0.5W MIN

SWITCHES FOR STAGE OPERATION CUSTOMER SUPPLIED

Two Stage Configuration — Config.: 4

Independent power input for alarm stage activation.
Line monitoring available for Stage 1 & 2 alarm stage.
Line monitoring requires common negative between each power input.
Line monitoring maximum voltage: 4Vdc.
Not to be used for reverse polarity line monitoring.

Stage 1: Apply Power to Stage 1 +ve & Stage 1 -ve
Stage 2: Apply Power to Stage 2 +ve & Stage 2 -ve

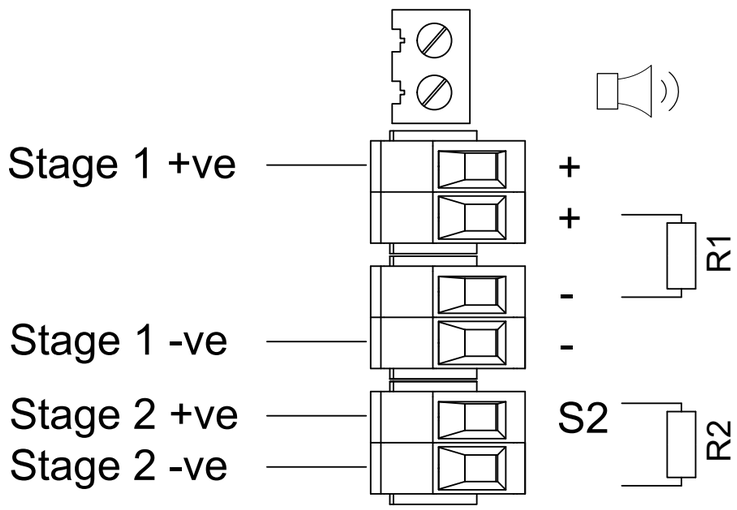

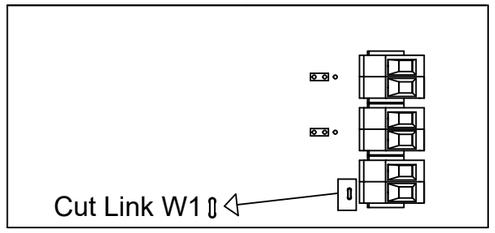

CUSTOM CONFIGURATION PRODUCT OPTION 'Y'

Two/Three Stage Voltage Free Activation Configuration — Config.: 5

Customer Set H1 & H2 to Negative Switching (See Below)

Power: +ve & -ve
Stage 1: Connect Stage 1 -ve to Common -ve
Stage 2: Cconnect Stage 2 -ve to Common -ve
Stage 3: Connect both Stage 1 -ve & Stage 2 -ve to Common -ve

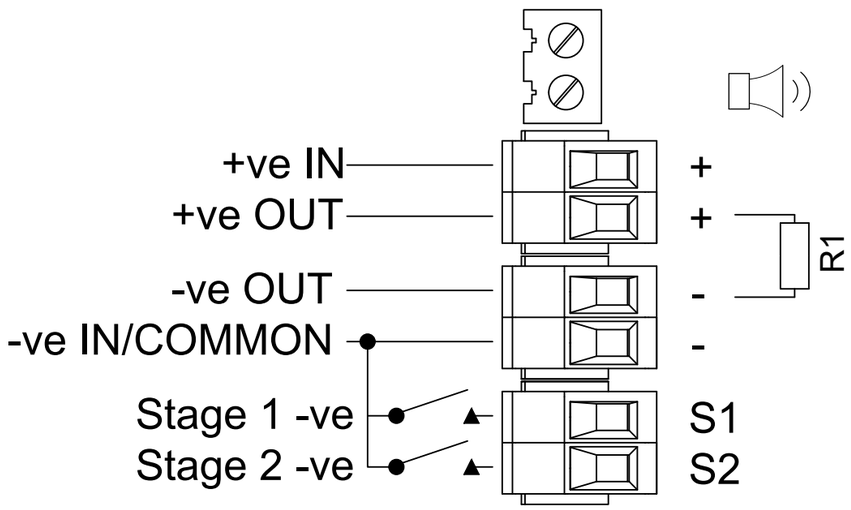

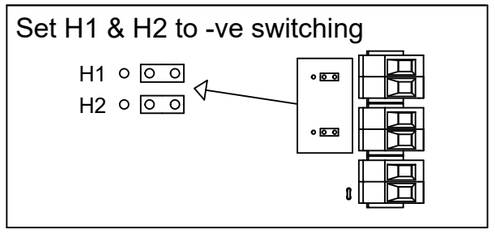

CUSTOM CONFIGURATION PRODUCT OPTION 'K'

Three/Four Stage Configuration — Config.: 6

Independent power input for alarm stage activation.
Line monitoring available for Stage 1, 2 & 3 alarm stage.
Line monitoring requires common negative between each power input.
Line monitoring maximum voltage: 4Vdc.
Not to be used for reverse polarity line monitoring.

Stage 1: Apply Power to Stage 1 +ve & Stage 1 -ve
Stage 2: Apply Power to Stage 2 +ve & Stage 2 -ve
Stage 3: Apply Power to Stage 3 +ve & Stage 3 -ve
Stage 4: Apply Power to Stage 2 +ve & Stage 2 -ve
& Apply Power to Stage 3 +ve & Stage 3 -ve

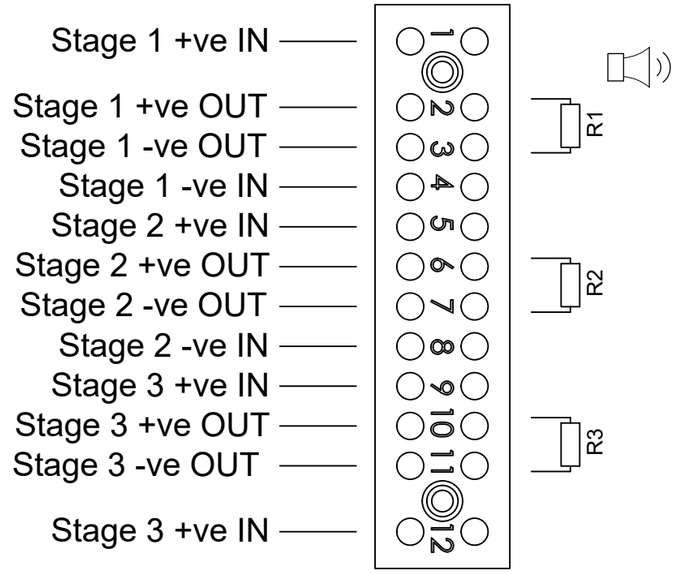

CUSTOM CONFIGURATION PRODUCT OPTION 'V'

DRAWING TO BS8888:2000
GEOMETRIC TOLERANCES TO ISO1101:1983
LINEAR DIMENSIONAL TOLS
ANGULAR DIMENSIONAL TOLS

STANDARDS
M RANGE

DRAWN	R.S.RAIT	DATE 05/03/2021
CHECKED	B.ISARD	DATE 05/03/2021
APPROVED	R.N.POTTS	DATE 05/03/2021

SURFACE FINISH | WEIGHT (Kg)
MATERIAL
ALTERNATIVE MATERIAL

THIS DRAWING AND ANY INFORMATION OR DESCRIPTIVE MATTER THEREIN IS COMMUNICATED IN CONFIDENCE AND IS THE COPYRIGHT PROPERTY OF EUROPEAN SAFETY SYSTEMS LTD. NEITHER THE WHOLE OR ANY EXTRACT MAY BE DISCLOSED, LOANED, COPIED OR USED FOR MANUFACTURING OR TENDERING PURPOSES WITHOUT THEIR WRITTEN CONSENT.

© EUROPEAN SAFETY SYSTEMS LTD.
AS PER LATEST DATE OF ISSUE SHOWN ABOVE

e2S warning signals
EUROPEAN SAFETY SYSTEMS LTD
IMPRESS HOUSE
MANSELL ROAD
ACTON
LONDON W3 7QH
WWW.E2S.COM

ALL DIMENSIONS IN MM
IF IN DOUBT, ASK - DO NOT SCALE

A3

TITLE MA1R, MA1F, MA2F & MA2H DC SOUNDER WIRING DIAGRAMS

SCALE	SHEET	DRAWING NUMBER
NTS	3 OF 3	D207-06-001

ISSUE	MOD No.	REASON - INITIAL - DATE
A		INTRODUCTION RSR - 05/03/2021
B	ACN0129	PRODUCT OPTION K CLARIFIED RSR - 29/03/2023

SWITCHES FOR STAGE OPERATION
CUSTOMER SUPPLIED

Single Stage Configuration — Config.: 1a

Stage 1: Apply Power to Stage 1 Live & Stage 1 Neutral

Three/Four Stage Configuration — Config.: 1b

Stage 1: Apply Power to Live & Neutral
Stage 2: Apply Power to Live & Neutral
& connect Stage 2 to Common
Stage 3: Apply Power to Live & Neutral
& connect Stage 3 to Common
Stage 4: Apply Power to Live & Neutral
& connect both Stage 2 & Stage 3 to Common

Two Stage Voltage Free Activation Configuration — Config.: 2

Power: Live & Neutral
Stage 1: Connect Stage 1 to Common
Stage 2: Connect Stage 2 to Common
Stage 3: Connect both Stage 1 & Stage 2 to Common

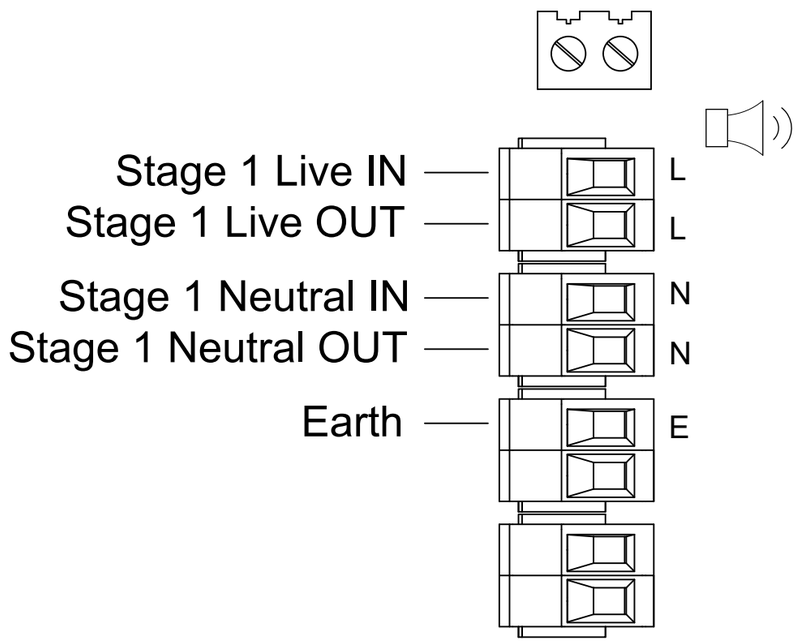

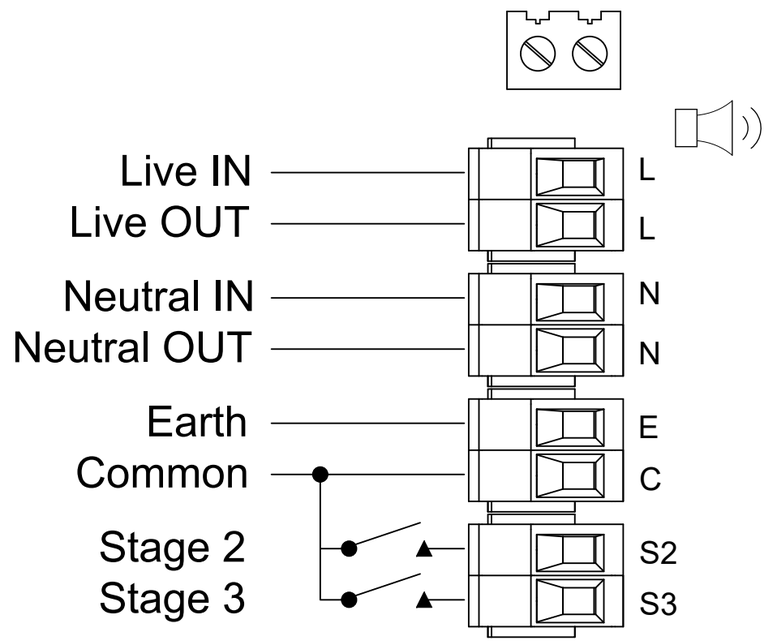

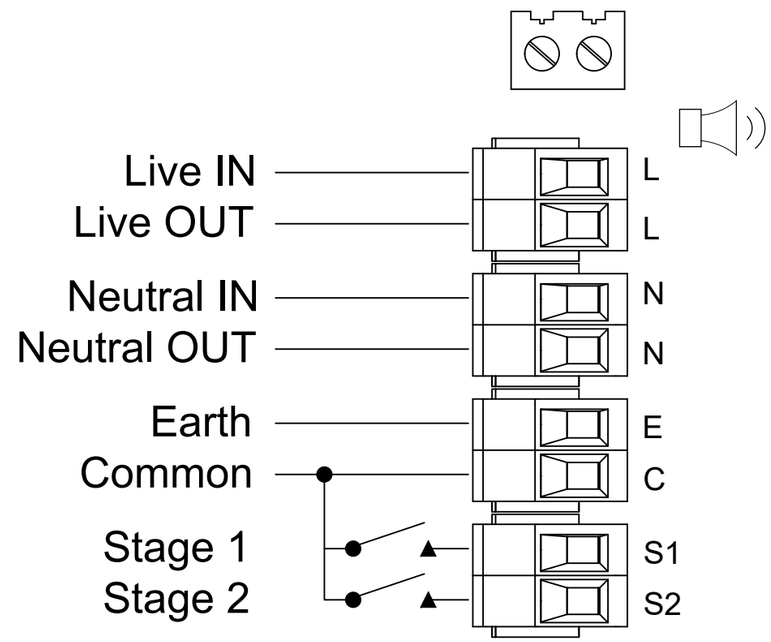

CUSTOM CONFIGURATION PRODUCT OPTION 'K'

DRAWING TO BS8888:2000
GEOMETRIC TOLERANCES TO ISO1101:1983
LINEAR DIMENSIONAL TOLS
ANGULAR DIMENSIONAL TOLS

STANDARDS
M RANGE

DRAWN	R.S.RAIT	DATE 05/03/2021
CHECKED	B.ISARD	DATE 05/03/2021
APPROVED	R.N.POTTS	DATE 05/03/2021

SURFACE FINISH
WEIGHT (Kg)
MATERIAL
ALTERNATIVE MATERIAL

THIS DRAWING AND ANY INFORMATION OR DESCRIPTIVE MATTER THEREIN IS COMMUNICATED IN CONFIDENCE AND IS THE COPYRIGHT PROPERTY OF EUROPEAN SAFETY SYSTEMS LTD. NEITHER THE WHOLE OR ANY EXTRACT MAY BE DISCLOSED, LOANED, COPIED OR USED FOR MANUFACTURING OR TENDERING PURPOSES WITHOUT THEIR WRITTEN CONSENT.

© EUROPEAN SAFETY SYSTEMS LTD.
AS PER LATEST DATE OF ISSUE SHOWN ABOVE

e2S warning signals
EUROPEAN SAFETY SYSTEMS LTD
IMPRESS HOUSE
MANSELL ROAD
ACTON
LONDON W3 7QH
WWW.E2S.COM

ALL DIMENSIONS IN MM
IF IN DOUBT, ASK - DO NOT SCALE

A3

TITLE MA1R, MA1F, MA2F, MA2H AC SOUNDER WIRING DIAGRAMS

SCALE	SHEET	DRAWING NUMBER
NTS	1 OF 1	D207-06-005