2-21-190 / Heavy industrial marine grade signals

MA1F Alarm Horn Sounder IP66/67 Type 4/4X/13

The MA1F is a high output, 117dB(A) alarm horn sounder. Featuring a robust, fire retardant, IP66 & IP67 Type 4/4X/13 enclosure.

The 'M' series of products have been designed to withstand the harshest of environments. Constructed from lightweight, impact and fire resistant ABS, the range features stainless steel, ratchet adjustable mounting brackets. The MA1F features a compact flare horn and employs the latest in reliable D Class amplifier technology for superior sound output with low in-rush and, current consumption and wide input voltage range.

Features

- Ingress protection IP66/67 Type 4/4X/13
- Automatic synchronisation on multi-sounder systems
- Continuously rated
- Very large termination area
- Dual M20 or 1/2"NPT cable entries – adaptors available
- 316 (A4) Stainless steel mounting bracket
- Ratchet adjustable 'U' bracket for 360° positioning
- Duplicate pluggable cable terminations
- Conformal coated (tropicalised) electronics
- 64 alarm tone frequencies and 4 remotely activated alarm stages
- Positive or negative stage activation switching
- Alternative activation configurations available
- Available with custom tone configurations and frequencies

- The MA1F is a direct replacement for the MA112 alarm horn sounder.

Approvals

- UL/ULC approved: S7995
- EAC compliant: EAЭC KZ 7500525.13.12.00682
- Russian Maritime Register of Shipping Cert: No. 19.00193.278
- SIL1 & SIL2 compliant to IEC61508 (2010)

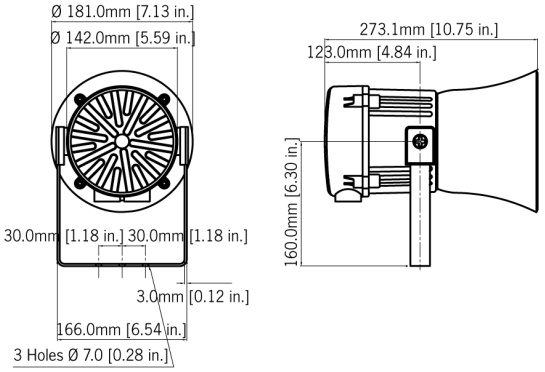

Specification

Maximum output:	117dB(A) @ 1 m +/- 3dB [108dB(A) @ 10ft/3m +/- 3dB]
Nominal output:	114dB(A) @ 1m +/- 3dB [103dB(A) @ 10ft/3m] +/- 3dB
No. of tones:	64 (UKOOA / PFEER compliant)
No. of stages:	4
Volume control:	Full range control
Effective range:	153m/502ft @ 1KHz
Voltages DC:	10-60V dc High voltage DC option available
Voltages AC:	100-240V ac 50/60Hz
In rush:	815mA within 4.0ms @ 24Vdc
Stage switching:	Negative, positive, voltage free
Safety Integrity Level:	SIL1 and SIL2 Route 2H IEC61508 (2010)
Ingress protection:	IP66 & IP67 Type 4/4X/13
Enclosure material:	High impact UL94 V0 & 5VA FR ABS
Enclosure colour:	Grey or Red
Cable entries:	2 x M20; 1 x M20 & 1 × 1/2"NPT; 2 × 1/2"NPT supplied with blanking plug
Terminals:	0.5 – 2.5mm² (20-14 AWG)
Line monitoring:	Diode polarized for use in supervised circuits
Operating temp:	-40 to +66°C [-40° to +151°F]
Storage temp:	-40 to +70°C [-40° to +158°F]
Relative humidity:	99%
MTBF DC:	93.92 years / 822,706 hours – MIL 217
MTBF AC:	46.66 years / 408,508 hours – MIL 217
Weight DC:	2.50kg/5.5lbs
Weight AC:	3.00kg/6.6lbs

Part Codes

Variable:	Identifier:	Description:
Product type:	MA1	Alarm horn sounder
Flare type:	F	Flare re-entrant horn
Voltage:	DC024 AC230	10-60V dc 100-240V ac 50/60Hz
Cable entries: [e]	A B C	M20x1.5 & ½" NPT M20x1.5 & M20x1.5 (Default) ½" NPT & ½" NPT
Stopping plug material: [m]	N	Nylon
Bracket: [s]	1 3	316 (A4) Stainless Steel 316 (A4) Stainless Steel with Equipment tag
Product version: [v]	A T	CE, EAC, RMRS, SIL1 & SIL2 Telephone/Relay Initiate – CE, EAC, RMRS – 100-260Vac or 10-30Vdc supply only
Product option: [o]	1 Z X Y K V	Standard product Custom alarm tone software – contact E2S Custom configuration – contact E2S Stage control Config. 4 Stage control Config. 5 (DC) and Config. 2 (AC) Stage control Config. 6
Enclosure colour: [x]	G R S	Grey Red Special colour – contact E2S

Accessories:

SP65-0001-A4	Pole Mount Bracket Kit St/St 316 (A4)
SP65-0003-A4	Sunshade – St/St 316 (A4)

Alarm stage control:

Please review the installation manual and wiring schematics for remote stage control and EOL resistor monitoring configuration options:

Config. 1 [DC]:	Factory default. Common negative, positive switching. Up to 4 Alarm Stages. EOL monitoring Alarm Stage 1 only
Config. 2 [DC]:	User setting. Common positive, negative switching. Up to 4 Alarm Stages. EOL monitoring Alarm Stage 1 only
Config. 3 [DC]:	User setting. Common positive, negative switching activation of Alarm Stages 1 & 2 with EOL on both stages. Reverse polarity monitoring
Config. 4 [DC]:	Product option 'Y'. Independent activation of Alarm Stages 1 & 2 with EOL on both stages. Forward polarity monitoring
Config. 5 [DC]:	Product option 'K'. Horn continuously powered. Voltage free activation of up to 3 alarm stages
Config. 6 [DC]:	Product option 'V'. Independent activation of up to 4 Alarm Stages with EOL on all stages. Forward polarity monitoring

Tone table

S 1	Description	S 2	S 3	S 4
T 1	1000 Continuous - PFEER Toxic Gas	Any	T 2	T 44
T 2	1200/500 @ 1Hz Sweeping - DIN / PFEER P.T.A.P.	Any	T 3	T 44
T 3	1000 @ 0.5Hz (1s on, 1s off) Intermittent - P...	Any	T 2	T 44
T 4	1.4KH-1.6KHz 1s, 1.6KHz-1.4KHz 0.5s - NF C 48...	Any	T 24	T 1
T 5	544(100mS)/440 (400mS) - NF S 32-001	Any	T 19	T 1
T 6	1500/500 - (0.5s on , 0.5s off) x3 + 1s gap -...	Any	T 44	T 1
T 7	500-1500Hz Sweeping 2 sec on 1 sec off - AS4428	Any	T 44	T 1
T 8	500/1200Hz @ 0.26Hz(3.3s on, 0.5s off) - NEN ...	Any	T 24	T 35
T 9	1000 (1s on, 1s off)x7 + (7s on, 1s off) - IM...	Any	T 34	T 1
T 10	1000 (1s on, 1s off)x7 + (7s on, 1s off) - IM...	Any	T 34	T 1
T 11	420(0.5s on, 0.5s off)x3 + 1s gap - ISO 8201 ...	Any	T 1	T 8
T 12	1000(0.5s on, 0.5s off)x3 + 1s gap - ISO 8201...	Any	T 1	T 8
T 13	422/775 - (0.85 on, 0.5 off) x3 + 1s gap - ...	Any	T 1	T 8
T 14	1000/2000 @ 1Hz - Singapore	Any	T 3	T 35
T 15	300 Continuous	Any	T 24	T 35
T 16	440 Continuous	Any	T 24	T 35
T 17	470 Continuous	Any	T 24	T 35
T 18	500 Continuous - IMO code 2 (Low)	Any	T 24	T 35
T 19	554 Continuous	Any	T 24	T 35
T 20	660 Continuous	Any	T 24	T 35
T 21	800 Continuous - IMO code 2 (High)	Any	T 24	T 35
T 22	1200 Continuous	Any	T 24	T 35
T 23	2000 Continuous	Any	T 3	T 35
T 24	2400 Continuous	Any	T 20	T 35
T 25	440 @ 0.83Hz (0.60s on, 0.60s off) Intermittent	Any	T 44	T 8
T 26	470 @ 0.9Hz (0.55s on, 0.55s off) Intermittent	Any	T 44	T 8
T 27	470 @ 5Hz (0.10s on, 0.10s off) Intermittent	Any	T 44	T 8
T 28	544 @ 1.14Hz (0.43s on, 0.44s off) Intermittent	Any	T 24	T 8
T 29	655 @ 0.875Hz (0.57s on, 0.57s off) Intermittent	Any	T 44	T 8
T 30	660 @ 0.28Hz (1.80s on, 1.80s off) Intermittent	Any	T 24	T 8
T 31	660 @ 3.3Hz (0.15s on, 0.15s off) Intermittent	Any	T 24	T 8
T 32	745 @ 1Hz (0.50s on, 0.50s off) Intermittent	Any	T 24	T 8

S 1	Description	S 2	S 3	S 4
T 33	800 (0.25s on, 1.00s off) Intermittent	Any	T 24	T 8
T 34	800 @ 2Hz (0.25s on, 0.25s off) - IMO code 3....	Any	T 24	T 8
T 35	1000 @ 1Hz (0.50s on, 0.50s off) Intermittent	Any	T 24	T 8
T 36	2400 @ 1Hz (0.50s on, 0.50s off) Intermittent	Any	T 24	T 8
T 37	2900 @ 5Hz (0.10s on, 0.10s off) Intermittent	Any	T 24	T 8
T 38	363/518 @ 1Hz (0.50s / 0.50s) Alternating	Any	T 8	T 19
T 39	450/500 @ 2Hz (0.25s / 0.25s) Alternating	Any	T 8	T 19
T 40	554/440 @ 1Hz (0.50s / 0.50s) Alternating	Any	T 24	T 19
T 41	554/440 @ 0.65Hz (0.76s / 0.76s) Alternating	Any	T 8	T 19
T 42	561/760 @ 0.83Hz (0.60s / 0.60s) Alternating	Any	T 8	T 19
T 43	780/600 @ 0.96Hz (0.52s / 0.52s) Alternating	Any	T 8	T 19
T 44	800/1000 @ 2Hz (0.25s / 0.25s) Alternating	Any	T 24	T 19
T 45	970/800 @ 2Hz (0.25s / 0.25s) Alternating	Any	T 8	T 19
T 46	800/1000 @ 0.875Hz (0.57s / 0.57s) Alternating	Any	T 24	T 19
T 47	2400/2900 @ 2Hz (0.25s / 0.25s) Alternating	Any	T 24	T 19
T 48	500/1200 @ 0.3Hz (1.67s / 1.67s) Sweeping	Any	T 24	T 12
T 49	560/1055 @ 0.18Hz (2.73s / 2.73s) Sweeping	Any	T 24	T 12
T 50	560/1055 @ 3.3Hz (0.15s / 0.15s) Sweeping	Any	T 24	T 12
T 51	600/1250 @ 0.125Hz (4s / 4s) Sweeping	Any	T 24	T 12
T 52	660/1200 @ 1Hz (0.50s / 0.50s) Sweeping	Any	T 24	T 12
T 53	800/1000 @ 1Hz (0.50s / 0.50s) Sweeping	Any	T 24	T 12
T 54	800/1000 @ 7Hz (0.07s / 0.07s) Sweeping	Any	T 24	T 12
T 55	800/1000 @ 50Hz (0.01s / 0.01s) Sweeping	Any	T 24	T 12
T 56	2400/2900 @ 7Hz (0.07s / 0.07s) Sweeping	Any	T 24	T 12
T 57	2400/2900 @ 1Hz (0.50s / 0.50s) Sweeping	Any	T 24	T 12
T 58	2400/2900 @ 50Hz (0.01s / 0.01s) Sweeping	Any	T 24	T 12
T 59	2500/3000 @ 2Hz (0.25s / 0.25s) Sweeping	Any	T 24	T 12
T 60	2500/3000 @ 7.7Hz (0.65s / 0.65s) Sweeping	Any	T 24	T 12
T 61	800Hz Motor Siren	Any	T 24	T 12
T 62	1200Hz Motor Siren	Any	T 24	T 12
T 63	2400Hz Motor Siren	Any	T 24	T 12
T 64	Simulated Bell	Any	T 21	T 12

No liability is accepted for any consequence of the use of this document. The technical specification of this unit is subject to change without notice due to our policy of continual product development. All dimensions are approximate. This unit is sold subject to our standard conditions of sale, a copy of which is available on request.